Name:_____

Exam Question Booklets
OCR Physics A

Booklet 2
20 Questions
109 marks

Things to remember:

✓

✓

✓

✓

✓

✓

✓

1 Fig. 2.1 shows a boy on a sledge travelling down a slope. The boy and sledge have a total mass of 60 kg and are travelling at a constant speed. The angle of the slope to the horizontal is 35°. All the forces acting on the boy and sledge are shown on Fig. 2.1 and in a force diagram in Fig. 2.2.

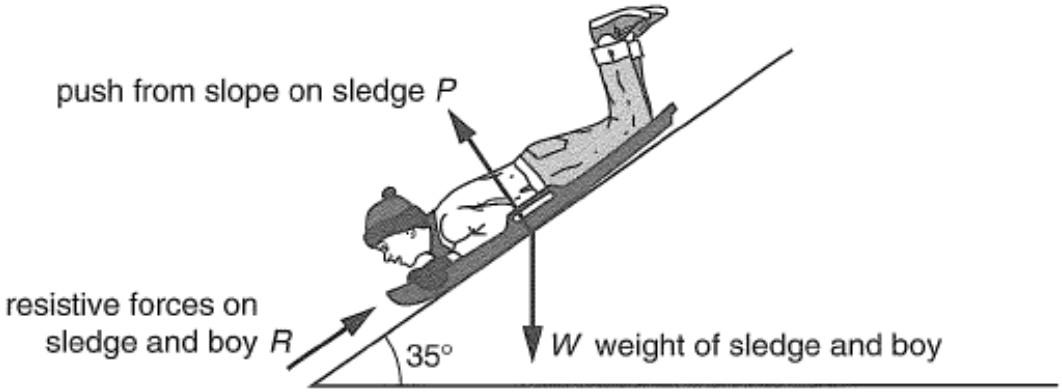

Fig. 2.1

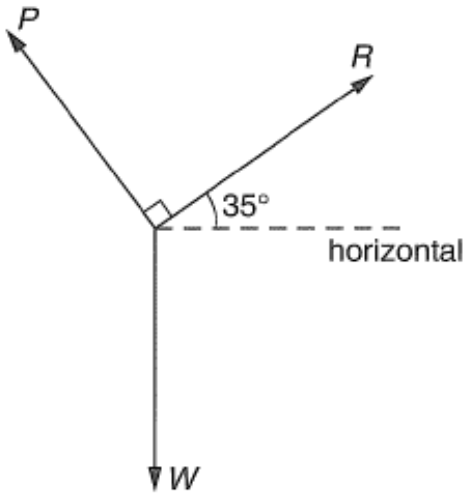

Fig. 2.2

(a) Calculate the magnitude of *W*, the total weight of the boy and sledge.

weight *W* = ... N [1]

(b) Determine the magnitude of the resistive force R.
You may find it helpful to draw a vector triangle.

resistive force R = ... N [4]

(c) Determine the component of the weight W that acts perpendicular to the slope.

component of W = ... N [2]

(d) State and explain why the boy is travelling at constant speed even though he is moving down a slope.

.....

.....

.....[2]

(a) Fig. 1.1 shows a skier being pulled up a slope at constant speed.

The tension in the wire pulls the skier with a force of 400 N that acts at 40° to the slope.

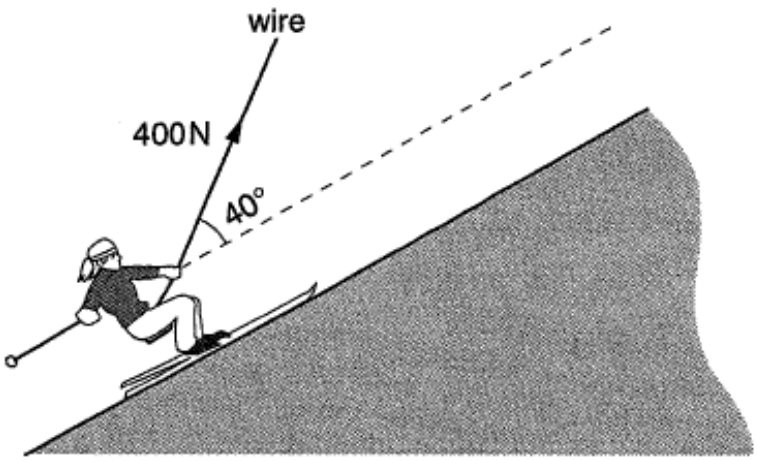

Fig. 1.1

(i) Explain with reference to the forces acting on the skier why he travels at constant speed.

.....

.....

..... [2]

(ii) Calculate the component of the tension in the wire

1. parallel to the slope

component = ... N

2. perpendicular to the slope.

component = ... N

[3]

3

(a) Define *acceleration.*

.....

.....[1]

(b) Fig. 3.1 shows the velocity *v* of a ball against time *t* as it falls vertically from rest to when it hits the ground at **A.**

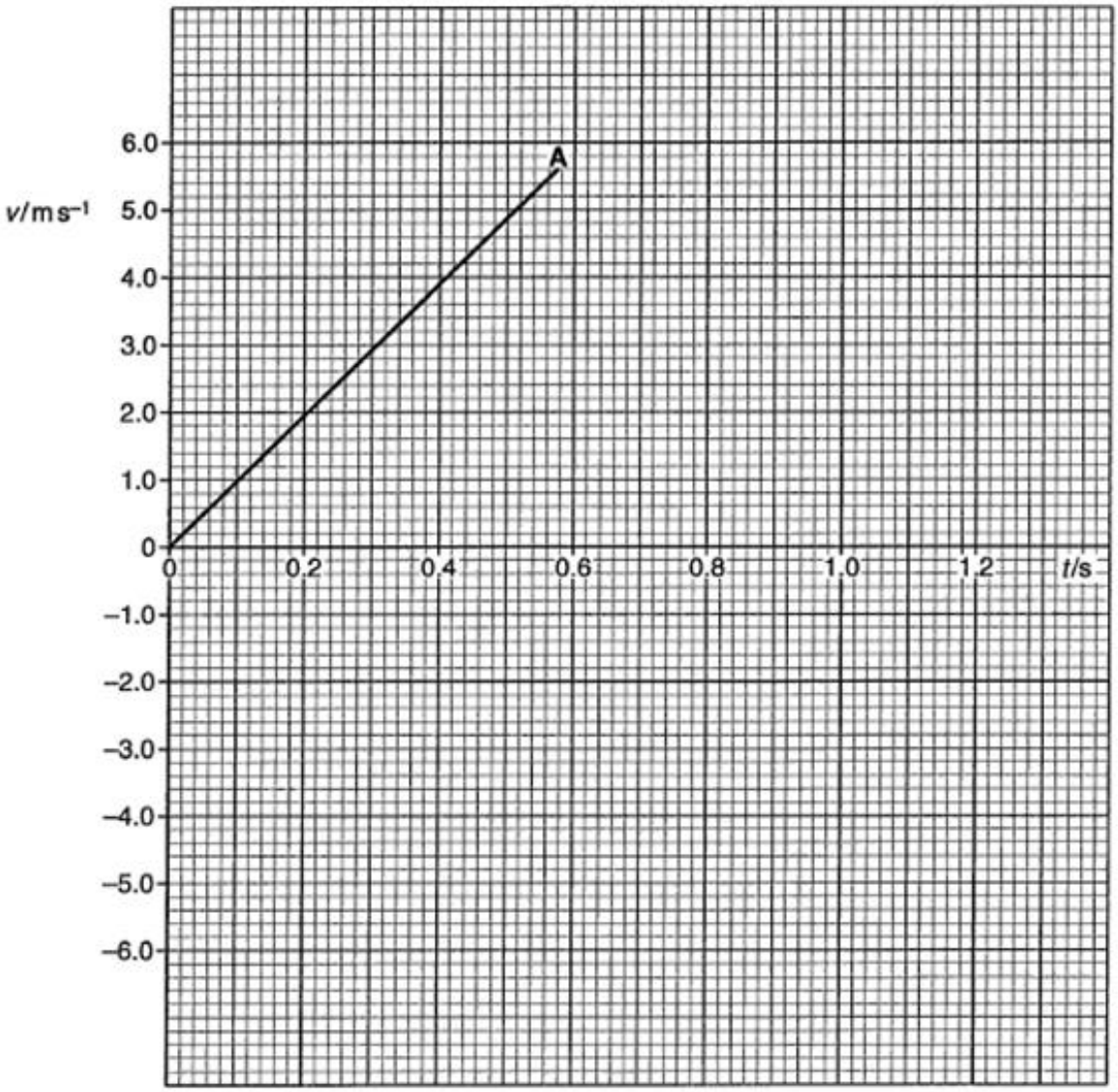

Fig. 3.1

Use Fig. 3.1 to show the distance that the ball falls is approximately 1.6 m.

[2]

(c) The ball is in contact with the ground for 20 ms and then rebounds vertically with an initial upwards velocity of 5.1 m s^{-1}.

(i) Calculate the acceleration of the ball as it rebounds while in contact with the ground.

acceleration = ... m s^{-2} [3]

(ii) Sketch on Fig. 3.1 the velocity against time graph for the ball after it has bounced off the ground until it reaches its maximum height. [3]

4

Fig. 4.2 shows the displacement *s* against time *t* for a second object.

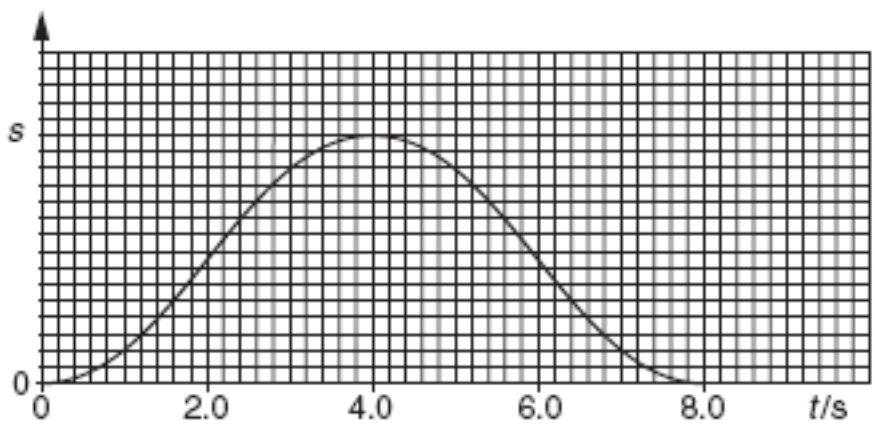

Fig. 4.2

(i) Use the graph to describe and explain how the velocity for this object changes with time. Use the time values on the graph as a reference for your description.

.....

.....

.....

..... [5]

(ii) Sketch on Fig. 4.3 a possible shape for variation of the velocity v against time t for this object.

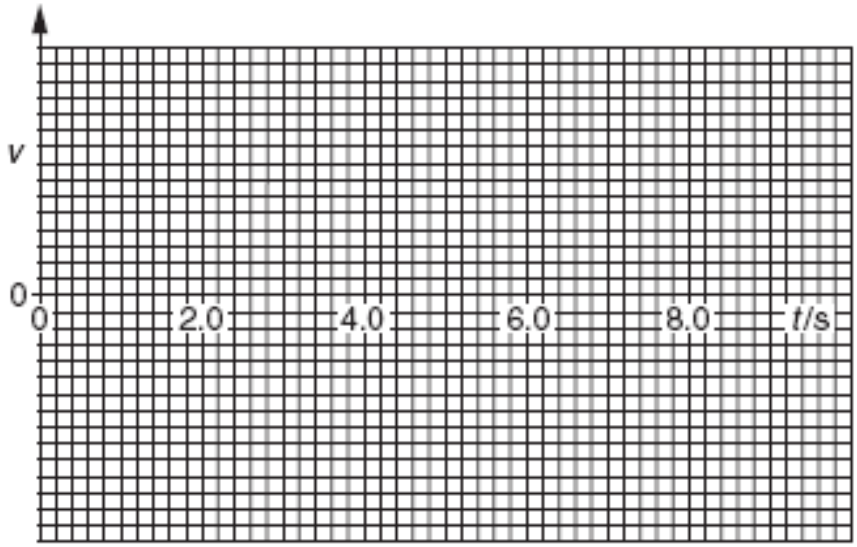

[2]

Fig. 4.3

5

(a) **(i)** Define *speed*.

.....

..... [1]

(ii) Define *velocity*.

.....

..... [1]

(iii) Define *acceleration*.

.....

..... [1]

A car travels a distance s in a time t with constant acceleration a. In this time, the velocity of the car increases from an initial velocity u to a final velocity v.

The equations below model the motion.

$$s = \frac{(u + v)t}{2} \qquad \textbf{equation 1}$$

$$v = u + at \qquad \textbf{equation 2}$$

(a) Rearrange each of these equations to make t the subject of the equation.

equation 1	**equation 2**
$t =$	$t =$ .....

[2]

(b) Equate the two expressions for t and hence show that

$$v^2 = u^2 + 2as.$$

[1]

7

The figure below shows the path of a ball as it is passed between three players. Player **A** passes a ball to player **B**. When player **B** receives the ball, she immediately passes the ball to player **C**. The distances for each pass are shown on the figure.

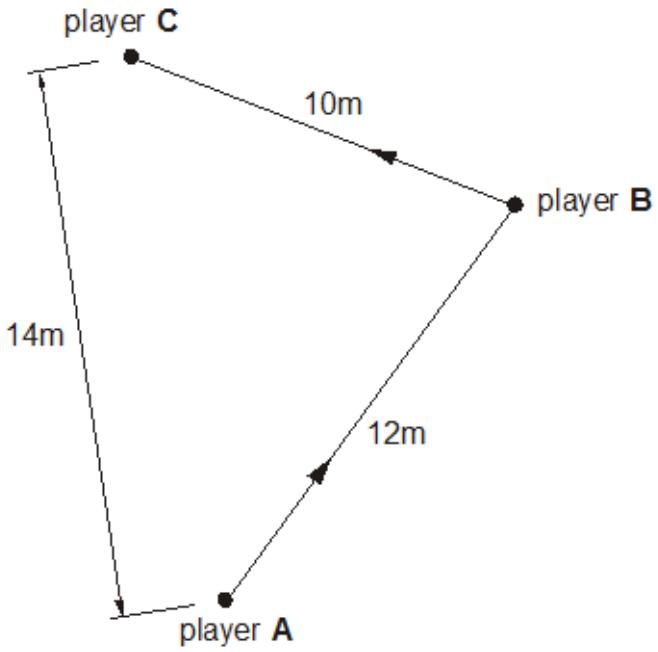

The ball takes 2.4 s to travel from player **A** to player **C**.

(i) Calculate, for the total journey of the ball

1. the average speed of the ball

average speed = ... m s^{-1}

[2]

2. the magnitude of the average velocity of the ball.

average velocity = ... m s^{-1}

[2]

(ii) Explain why the values for the **average speed** and **average velocity** are different.

.....

.....

.....

.....

[2]

8 **(a)** Define moment of a force.

.....

.....[2]

(b) Fig. 5.1 shows a student being weighed. The student, of mass 50 kg, stands 0.30 m from end A of a uniform plank of mass 8.0 kg and length 2.0 m. The plank is pivoted 0.50 m from end A, and an object of mass 5.0 kg is moved from end B until the plank balances.

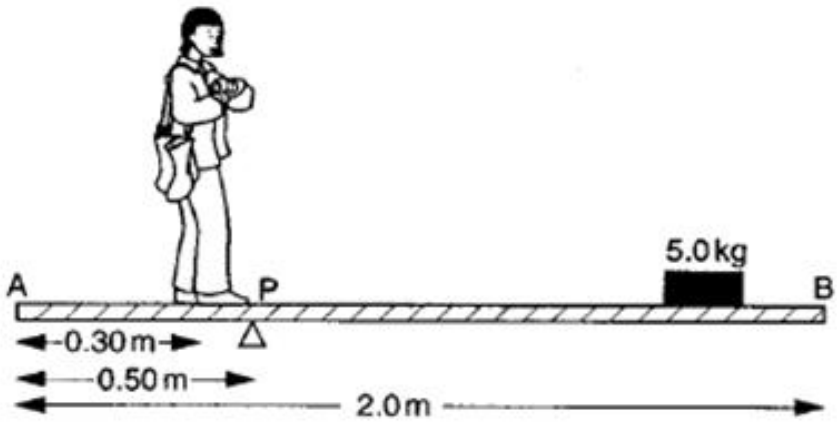

Fig. 5.1

(i) On Fig. 5.1, draw and label the forces acting on the plank. [2]

(ii) Show by using the principle of moments that the 5.0 kg mass must be placed 0.30 m from end B in order for the plank to balance.

[4]

(iii) The arrangement shown in Fig. 5.1 has a maximum mass that it can determine. Suggest **two** changes that can be made to the arrangement to increase this maximum possible mass. Explain your answers.

1. .....

.....

2. .....

.....[3]

(a) **(i)** Define *moment of a force* about a point.

.....

.....

(ii) Define *torque of a couple.*

.....

..... [3]

(b) Fig. 6.1 shows the steering wheel of a car being acted on by two equal forces.

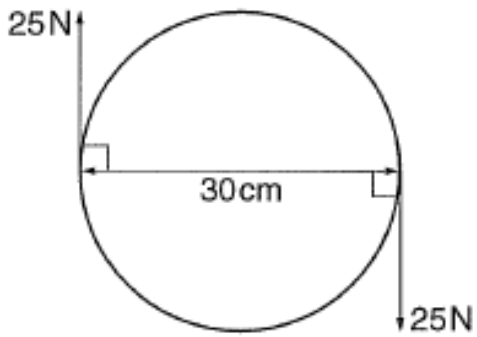

Fig. 6.1

(i) Calculate the torque acting on the wheel due to these forces.

torque ..... unit ..... [2]

(ii) Explain whether the steering wheel is in equilibrium when subjected to these two forces only.

.....

.....

..... [2]

Fig. 2.1 shows a computer resting on a tabletop that is hinged at A.

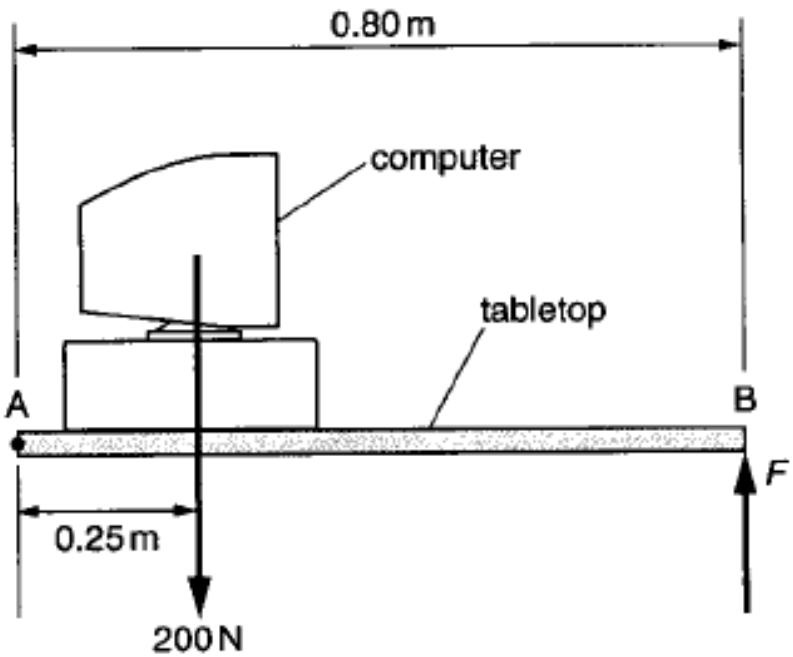

Fig. 2.1

The tabletop has a mass of 5.0 kg and its centre of gravity is 0.40 m from the axis of hinge at A. The computer has a weight of 200 N acting through a point 0.25 m from hinge at A. The tabletop is supported to maintain it in a horizontal position by a forc e acting vertically at B. The distance AB is 0.80 m.

(i) Calculate the weight of the tabletop.

weight = ... N [1]

(ii) On Fig. 2.1 draw and label an arrow to represent the weight *W* of the tabletop. [1]

(iii) Apply the principle of moments about the hinge at A to determine the vertical force F applied at B that is required to maintain the tabletop in equilibrium.

force F = ... N [3]

(iv) The tabletop must experience a resultant force of zero in order to be in equilibrium. Explain how the forces acting on the tabletop fulfil this condition.

.....

.....

.....

.....[2]

11

Fig. 4.1 shows a girl supported by two elastic ropes. She is in equilibrium. Her weight is 392 N.

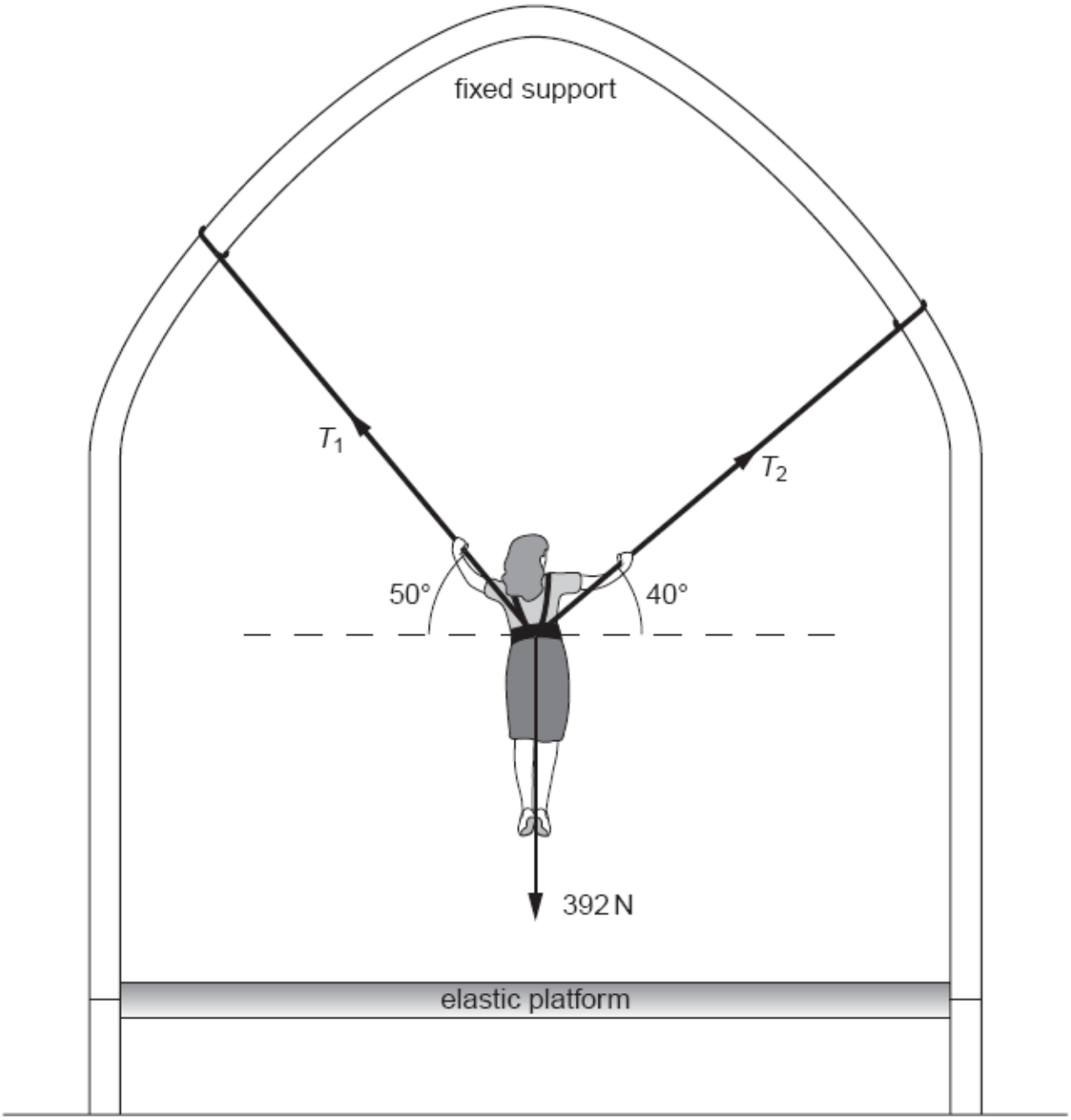

(a) Determine the tensions T_1 and T_2 in the two ropes.

tension T_1 = ... N

tension T_2 = ... N [4]

(b) The girl is pulled vertically downwards so that the ropes stretch. She is then released. Discuss without further calculation whether the method you used in **(a)** could be used to determine the tensions in the ropes immediately after she is released.

.....

.....

.....

.....[2]

Fig. 4.1 shows a method used to knock down walls.

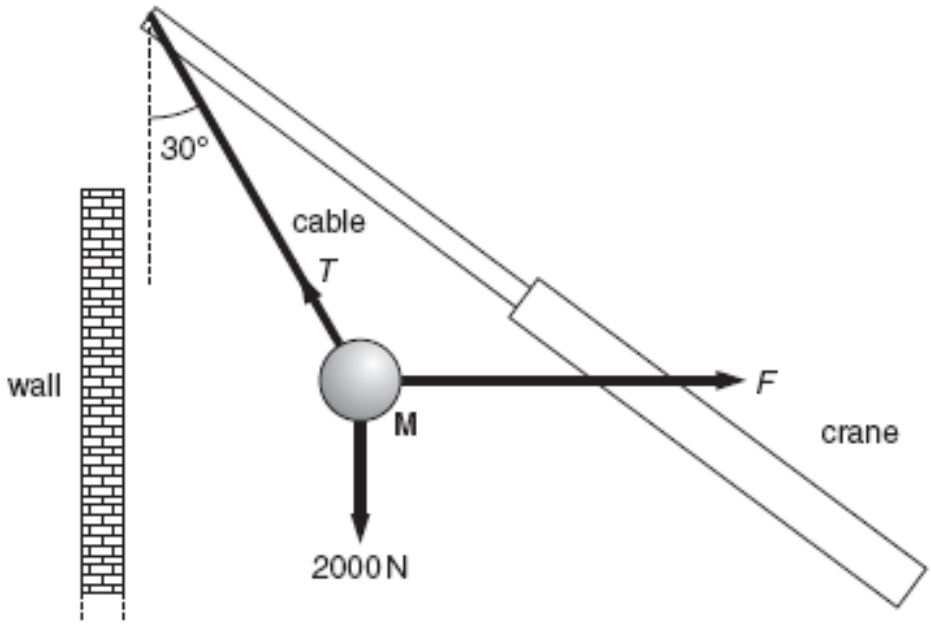

Fig. 4.1

M is a heavy steel ball suspended by a cable in which the tension is *T*. The ball is pulled to one side by a horizontal force *F* until the cable is at 30° to the vertical. It is then released so that it swings into the wall. The weight of the ball **M** is 2000 N.

(a) Determine the force *F* by using a triangle of forces **or** a scale diagram of the forces **or** by resolving forces.

force *F* = ... N [3]

(b) State and explain one change that could be made to this method to cause more damage to the wall.

.....

.....

.....

.....

.....[2]

Fig. 1.3 shows two strings supporting an object of weight 12 N. The tension in one of the strings is 6.0 N. The tension in the other string is *T*.

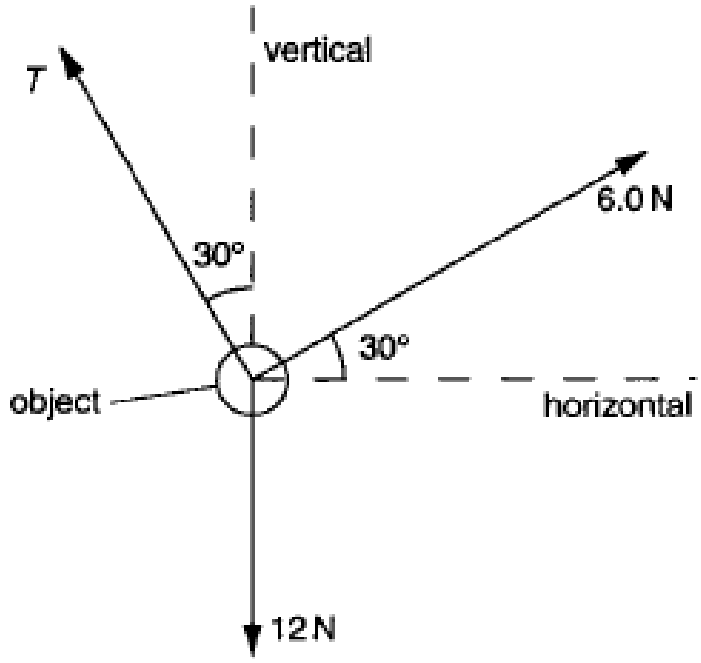

Fig. 1.3

(i) Calculate the magnitude of the vertical component of the tension *T* in order for the object to be in equilibrium.

vertical component ..... N [2]

(ii) Hence calculate the magnitude of *T*.

magnitude of *T* ..... N [2]

A girl takes up a hand-stand position on the edge of a high board above the water surface in the pool, as shown in Fig. 6.1.

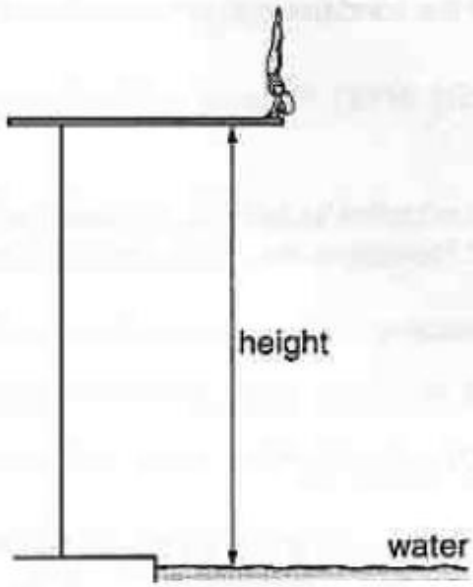

Fig. 6.1

She then dives vertically from rest through the air and enters the water 1.75 s after leaving the board.

Calculate the height of the diving board above the water surface. Neglect any effects of air resistance.

$g = 9.8\,\mathrm{m\,s^{-2}}$

height = ...m [3]

15

A coin falls from rest, under gravity, down a deep well. The coin hits the bottom of the well 4.0 s later.

(a) Calculate the depth of the well.

acceleration due to gravity = 9.8 m s^{-2}.

depth = ... m

[2]

(b) In fact, the depth of the well is known to be 70 m.

Suggest a reason for the difference in the values.

[2]

16 Fig. 5.1 shows a human reflex test.

The tester, **A**, holds the top of a £20 note, while the person being tested, **B**, holds his hand still, with thumb and forefinger apart and level with the bottom of the note.

Without warning, **A** releases the note.

B must grasp it before it has passed through his fingers.

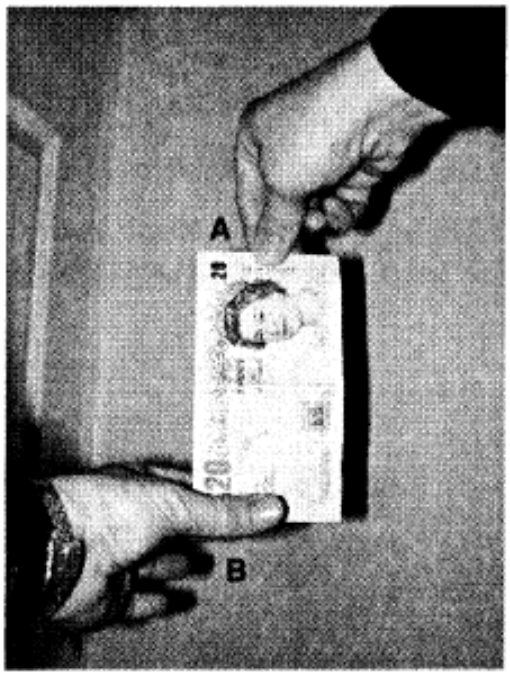

Fig. 5.1

The length of a £20 note is 150 mm.

Show that **B** must react in less than 0.2 s from the release of the note to catch it.
Neglect any effects of air resistance.

$g = 9.8\,\text{m}\,\text{s}^{-2}$

[3]

A stone is dropped down a well which is 6.80 m deep.

The time from releasing the stone to hearing the sound of it hitting the bottom of the well is 1.20 s.

(a) A student calculates the time for the stone to reach the bottom of the well and finds that it is less than 1.20 s.

Carry out the calculation to show that the time is less than 1.20 s.
Ignore any effects of air resistance.
Give your answer to **three** significant figures.

$g = 9.81\ \mathrm{m\,s^{-2}}$

time = ... s [2]

(b) The student realises that the difference between these times is the time it takes for the sound caused by the stone hitting the bottom to travel back up the well. This allows him to estimate the velocity of sound in the well.

Calculate the velocity of sound in the well.

velocity of sound = ... $\mathrm{m\,s^{-1}}$ [2]

The cheetah is the fastest animal on land.
The highest speed reached by a cheetah is recorded as 114 km per hour.

(a) Show that 114 km per hour is about 32 m s^{-1}.

[1]

(b) The cheetah can accelerate from rest to 114 km per hour in 8.4 s.

Calculate the average acceleration of the cheetah. Express your answer in m s^{-2}.

average acceleration = ... m s^{-2} [2]

19

This question is taken from an investigation into bouncing balls.

Ignore any effects of air resistance in this question.

(a) A steel ball is dropped from rest at a height of 3.0 m above a horizontal surface.

(i) Show that the time taken for the ball to reach the surface is about 0.8 s.

acceleration due to gravity = 9.8 m s^{-2}

[2]

(ii) Calculate the vertical speed of the ball as it strikes the surface after falling 3.0 m.

vertical speed = ... m s^{-1} **[2]**

Fig. 4.1 shows the open bonnet of a car. The bonnet is held open at an angle of 60° to the horizontal by a vertical force V applied at one end of the bonnet (shown on the diagram). The bonnet is 0.90 m long, has a weight of 25 N and its centre of gravity **G** is 0.35 m from the hinge at **O**.

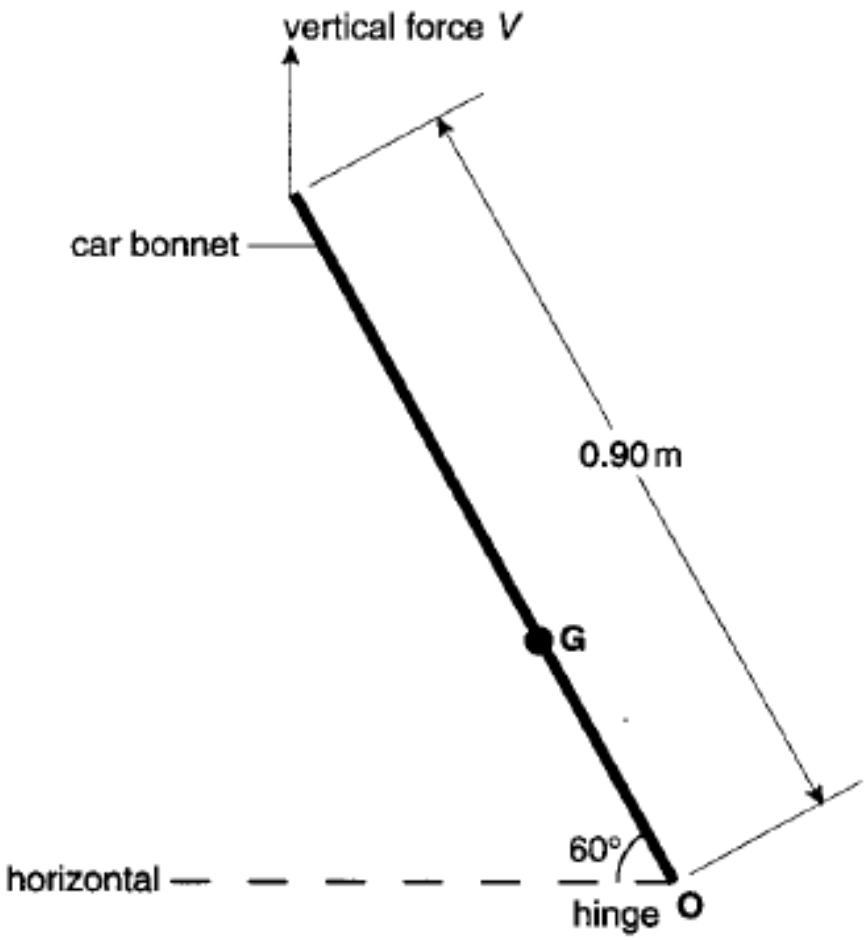

Fig. 4.1

(i) On Fig. 4.1, draw and label the two forces other than V acting on the bonnet. [2]

(ii) By taking moments about **O**, show that the vertical force V applied at the end of the bonnet is 9.7 N.

[2]

(iii) Calculate the magnitude of the force acting at the hinge **O**. Show your working.

force at hinge = ... N [2]